REVISIONS				
ZONE	REV	DESCRIPTION	DATE	APPROVED
	A	REDRAWN	16MAY97	
	B	LID THREAD REVISED	09FEB00	

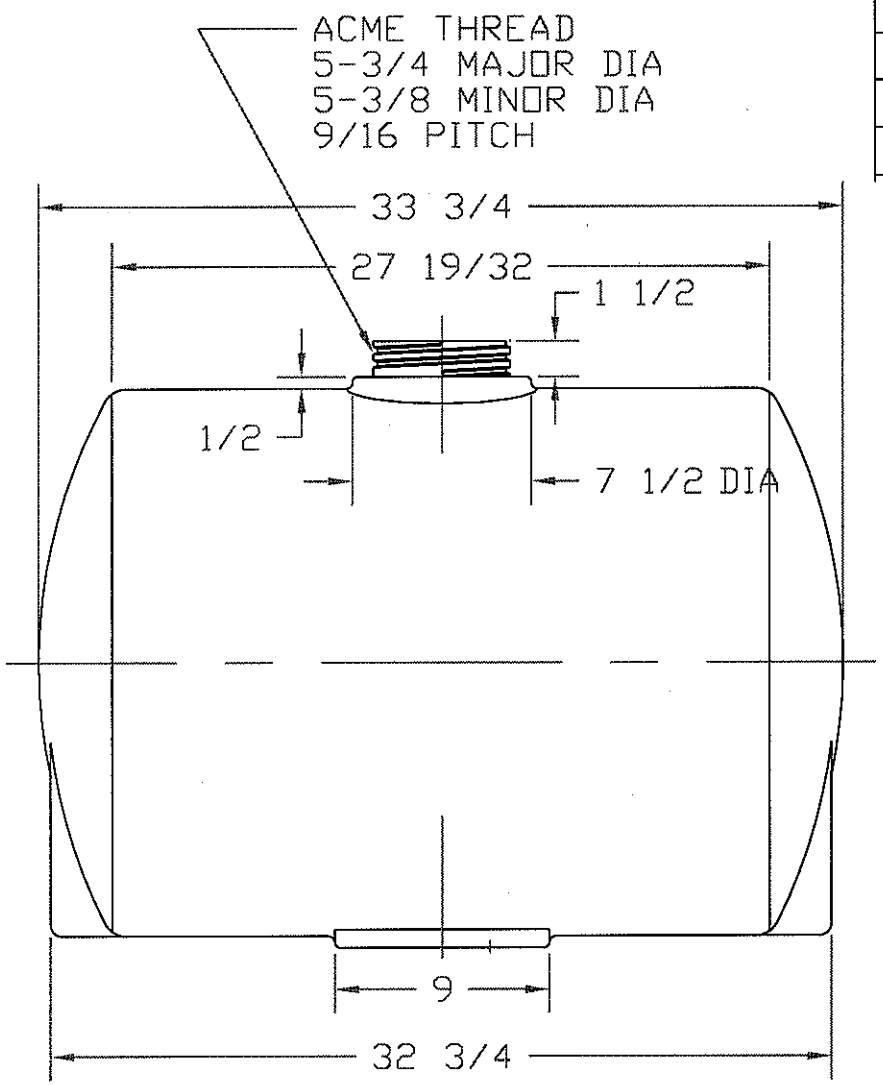

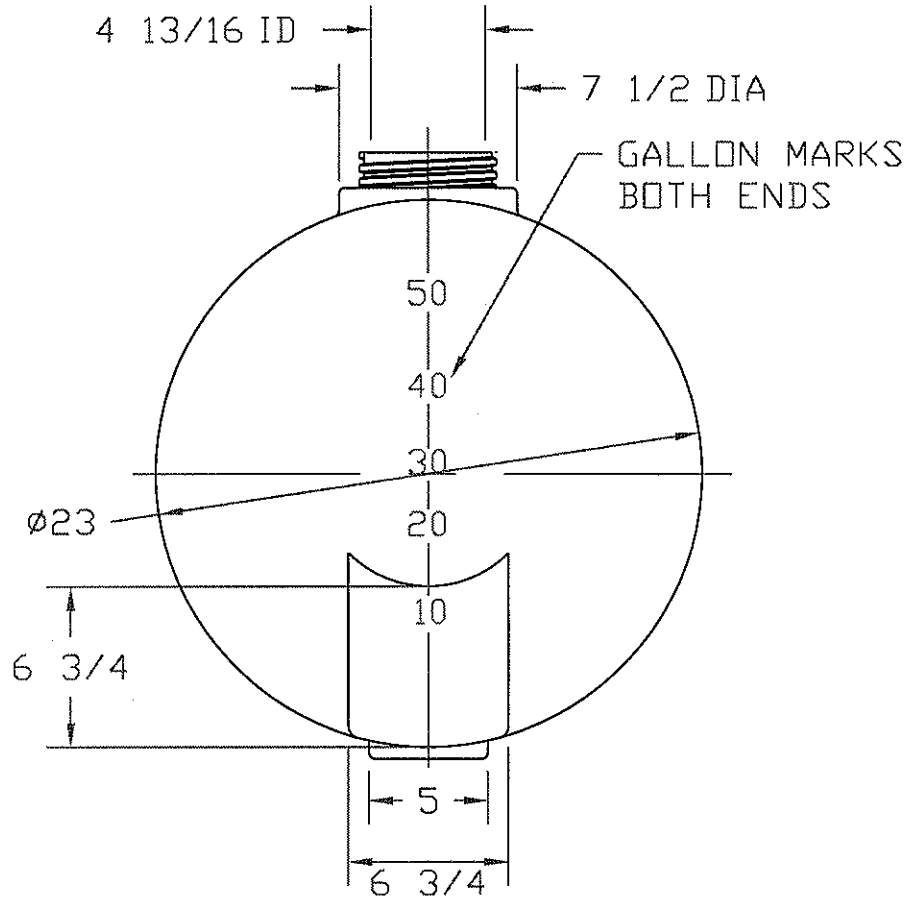

NORWESCO
ST. BONIFACIUS, MN

55 GALLON APPLICATOR TANK

JTP 16MAY97

SIZE	FSCM NO.	DWG NO.	REV
A			B

SCALE 1/8 SHEET